RoHS

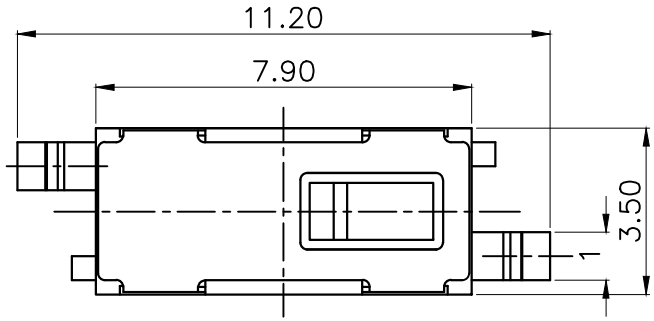

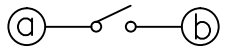

Circuit Diagram

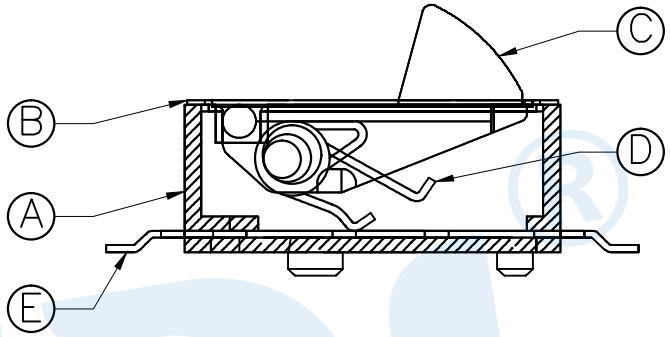

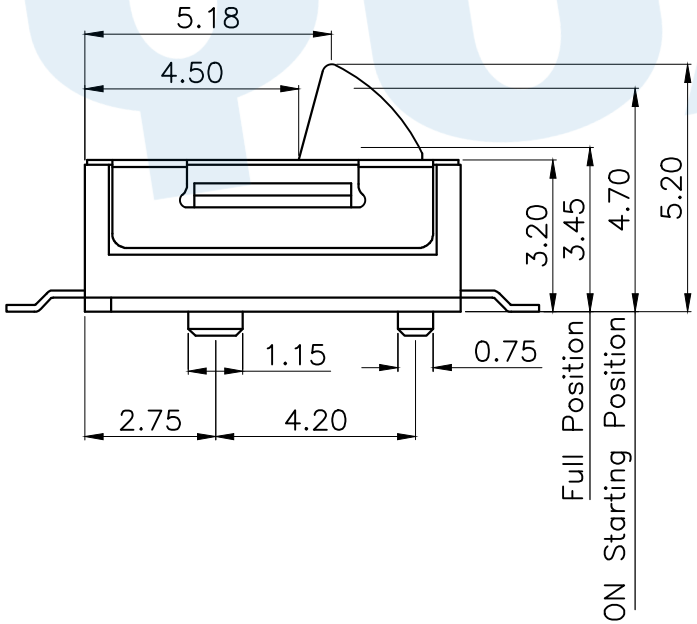

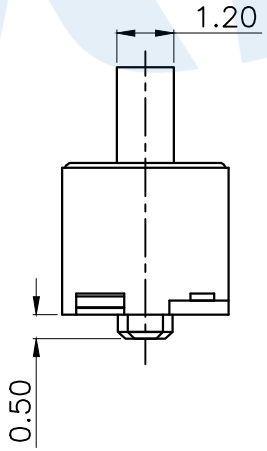

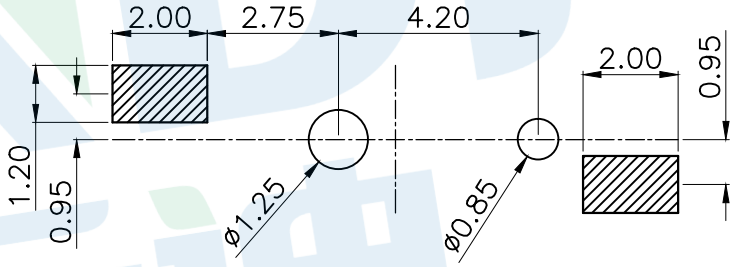

PCB Layout(Pattern side)

Technical Parameters

1.Rated current: DC 12V 50mA

2.Operating force:30±20gf

3.Mechanical life: 100,000 times

NO.	Name	Number	Qty	Materil	Remarks
Ⓔ	Terminal		2	Phosphor bronze	Silvering
Ⓓ	Contact spring		1	Phosphor bronze	Silvering
Ⓒ	Button		1	Nylon	Black
Ⓑ	Cover		1	SUS	Natural
Ⓐ	Base		1	LCP	Black

YUANDI® Yuandi Electronics Co,Ltd

angle	±2°	design	date	name	DETECTION SWITCH
10~30	±0.30	Review	date		
5~10	±0.20	Approved	date	model	TQ-2514
~ 5	±0.10	Drawing number:			
modify / Review / Approved	Tolerance not specified	Proportion 1:1	unit mm	gape number	A4