RoHS

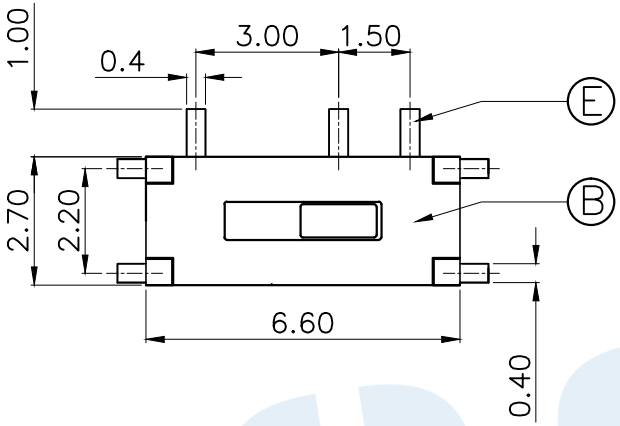

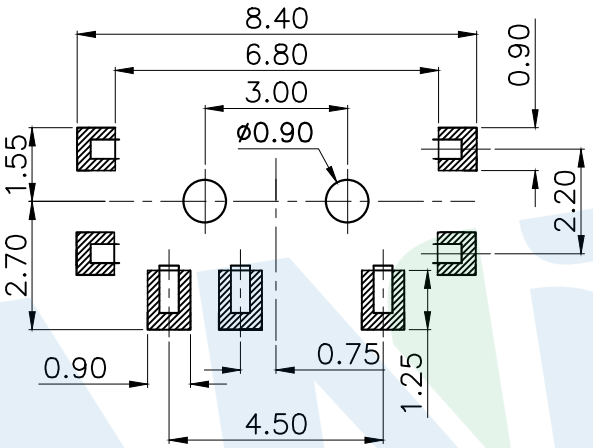

PCB Layout(Pattern side)

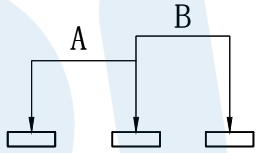

Circuit Diagram

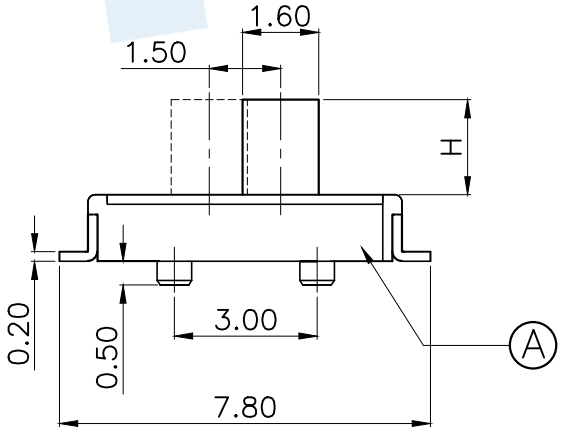

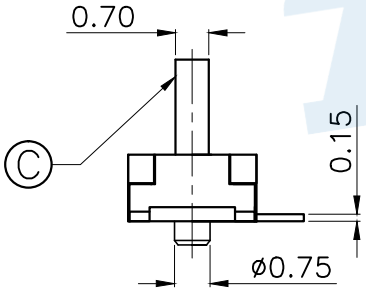

Code	H	Operating force
A1	1.5	160±50gf
A2	2.0	

NO.	Name	Number	Qty	Materil	Remarks
F	Shrapnel		1	SUS	Natural
E	Terminal		3	Phosphor bronze	Silver
D	Contact reed		1	Beryllium copper	Silver covered
C	Handle		1	Nylon	Black
B	Cover		1	Brass	Natural
A	Base		1	LCP	Black

YUANDI® 元迪 Yuandi Electronics Co,Ltd

				angle	±2°		design		date		name	TOGGLE SWITCH
				10~30	±0.30		Review		date			
				5~10	±0.20		Approved		date		model	TA-3524S-A□
				~ 5	±0.10	Drawing number:						
			modify	Review	Approved	Tolerance not specified	Proportion	1:1	unit	mm	gape number	A4