RoHS

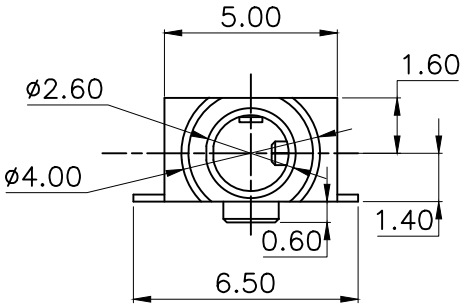


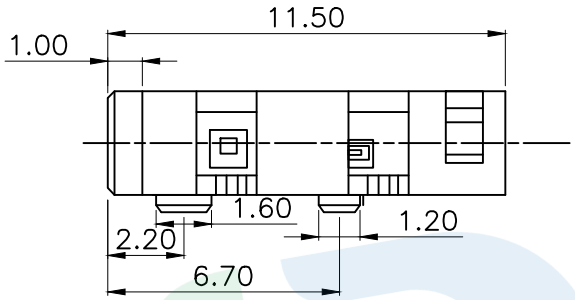


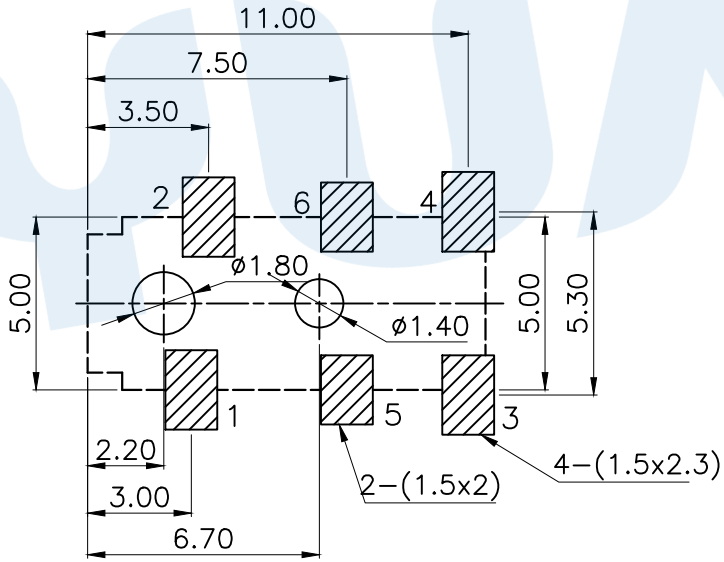


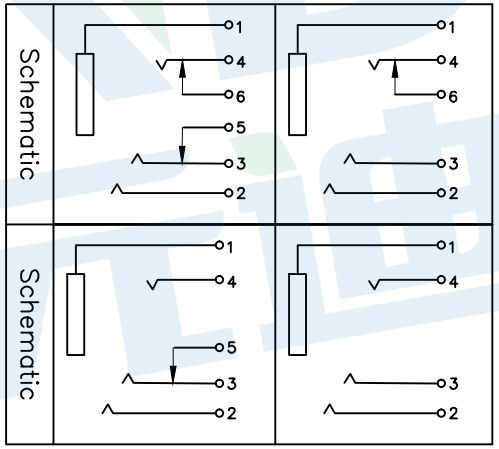


P.C.B LAYOUT(Copper-side view)

Rating:0.5A 30V DC
Contact Resistance:100 mΩ Max.
Operating temperature:-20 ~70
Operating force:3-20N
Operating Life:5,000cycles

| NO. | Name | Number | Qty | Materil | Remarks |
|---|---|---|---|---|---|
| Ⓑ | Terminal | | 6 | Phosphor bronze | Au Plating |
| Ⓐ | Housing | | 1 | Nylon | Black |

YUANDI® Yuandi Electronics Co,Ltd

| | | | | |
|---|---|---|---|---|
| angle | ±2° | design | date | name: PHONE JACKES |
| 10~30 | ±0.30 | Review | date | |
| 5~10 | ±0.20 | Approved | date | model: PJ-247 |
| ~ 5 | ±0.10 | Drawing number: | | |
| modify / Review / Approved | Tolerance not specified | Proportion 1:1 | unit mm | gape number / A4 |