RoHS

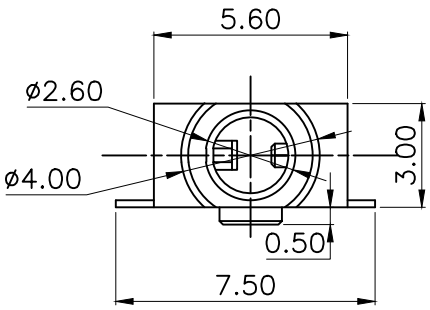

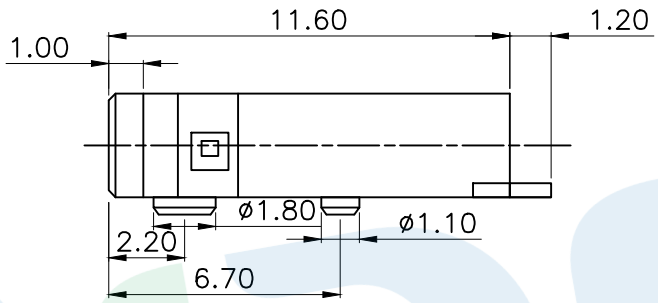

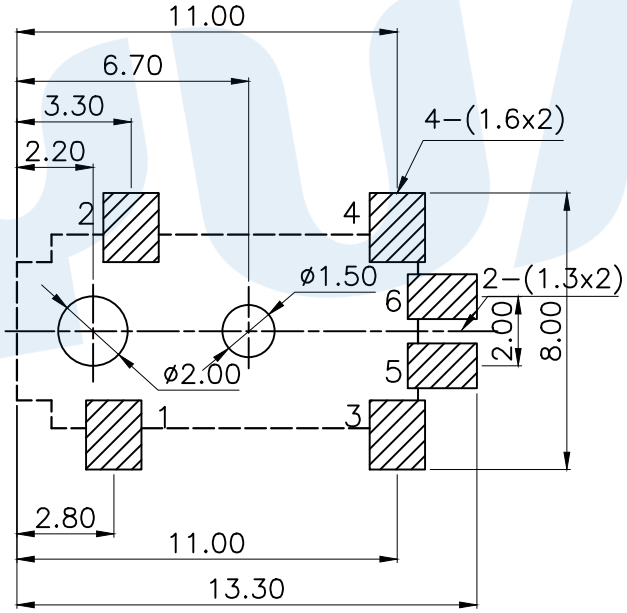

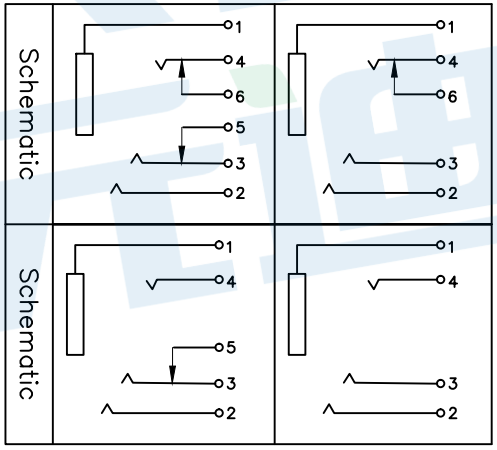

P.C.B LAYOUT(Copper−side view)

Rating:0.5A 30V DC
Contact Resistance:100 mΩ Max.
Operating temperature:−20 ~70
Operating force:3−20N
Operating Life:5,000cycles

NO.	Name	Number	Qty	Materil	Remarks
Ⓑ	Terminal		6	Phosphor bronze	Au Plating
Ⓐ	Housing		1	Nylon	Black

YUANDI® Yuandi Electronics Co,Ltd

angle	±2°	design	date	name	PHONE JACKES
10~30	±0.30	Review	date		
5~10	±0.20	Approved	date	model	PJ−245
~ 5	±0.10	Drawing number:			
modify / Review / Approved	Tolerance not specified	Proportion 1:1	unit mm	gape number	A4