RoHS

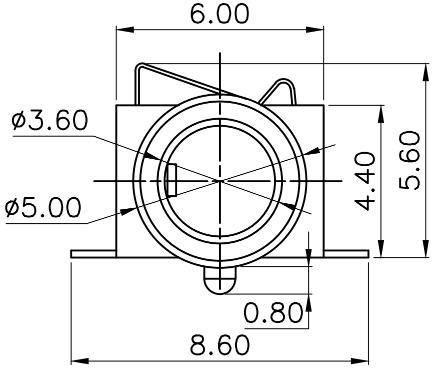

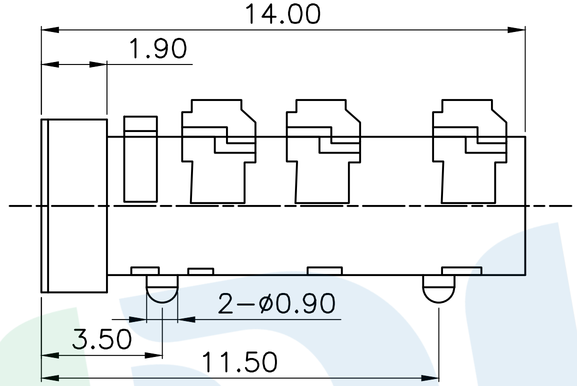

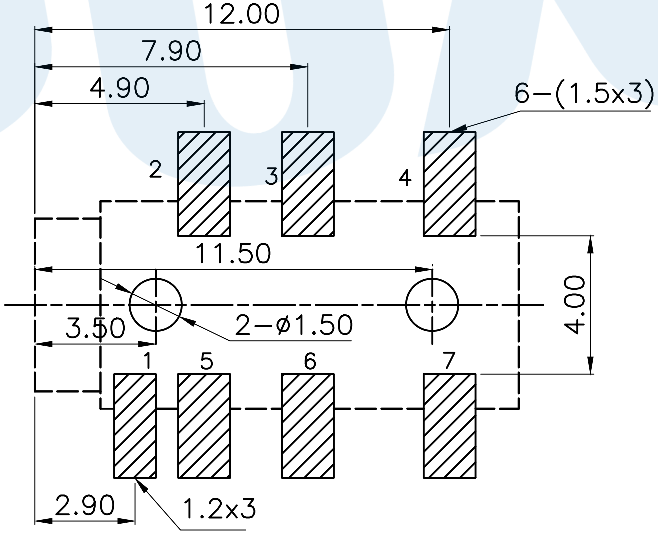

P.C.B LAYOUT(Copper−side view)

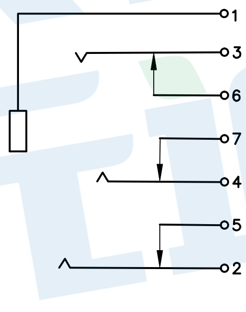

CIRCUIT DIAGRAM

Rating:0.5A 30V DC
Contact Resistance:100 mΩ Max.
Operating temperature:−20 ~70
Operating force:3−20N
Operating Life:5,000cycles

NO.	Name	Number	Qty	Materil	Remarks
Ⓑ	Terminal		7	Phosphor bronze	Au Plating
Ⓐ	Housing		1	Nylon	Black

YUANDI® Yuandi Electronics Co,Ltd

angle	±2°		design		date		name	PHONE JACKES	
10~30	±0.30		Review		date				
5~10	±0.20		Approved		date		model	PJ−355	
~ 5	±0.10	Drawing number:							
Tolerance not specified		Proportion	1:1	unit	mm	gape number		A4	

modify	Review	Approved