RoHS

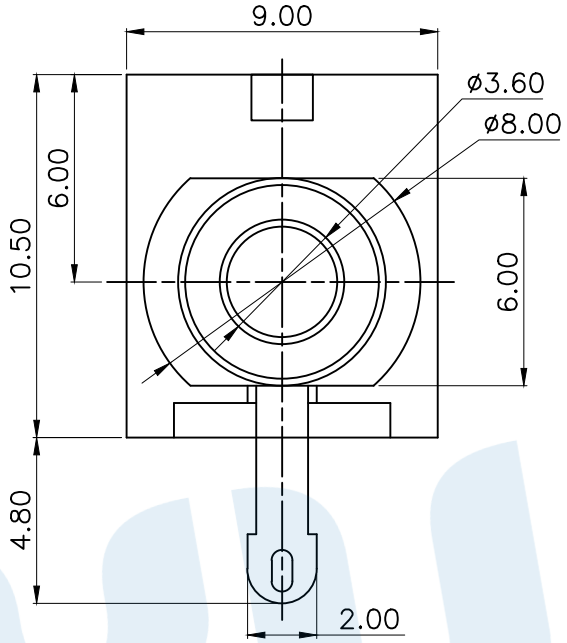

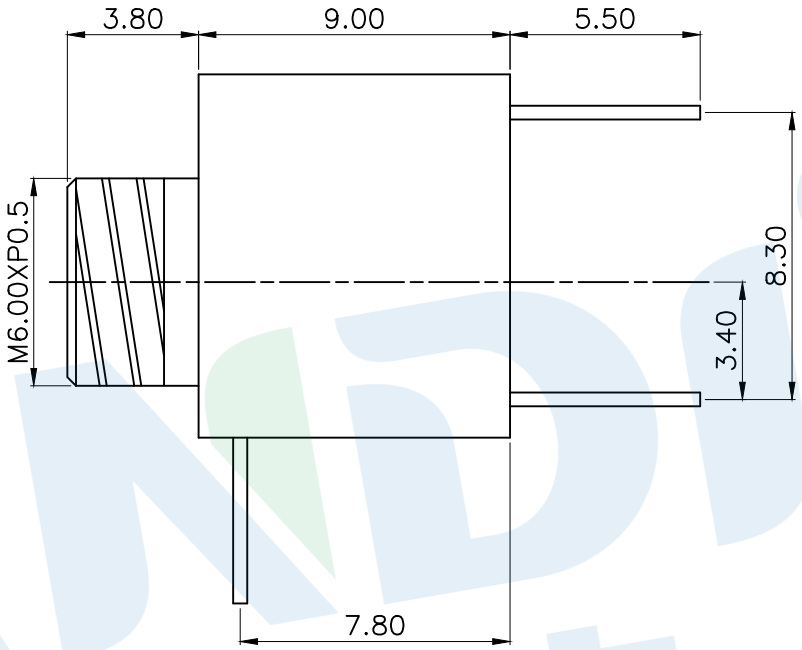

Model NO	PJ-3111
Schematic	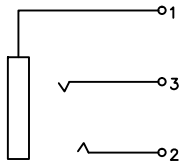

Rating:0.5A 30V DC
Contact Resistance:100 mΩ Max.
Operating temperature:-20 ~70
Operating force:3-20N
Operating Life:5,000cycles

NO.	Name	Number	Qty	Materil	Remarks
Ⓑ	Terminal		3	Phosphor bronze	Ag Plating
Ⓐ	Housing		1	Nylon	Black

YUANDI® Yuandi Electronics Co,Ltd

angle	±2°	design	date	name	PHONE JACKES
10~30	±0.30	Review	date		
5~10	±0.20	Approved	date	model	PJ-3111
~ 5	±0.10	Drawing number:			
modify / Review / Approved	Tolerance not specified	Proportion 1:1	unit mm	gape number	A4