RoHS

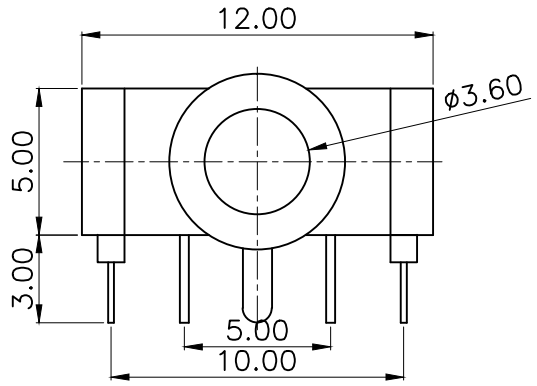

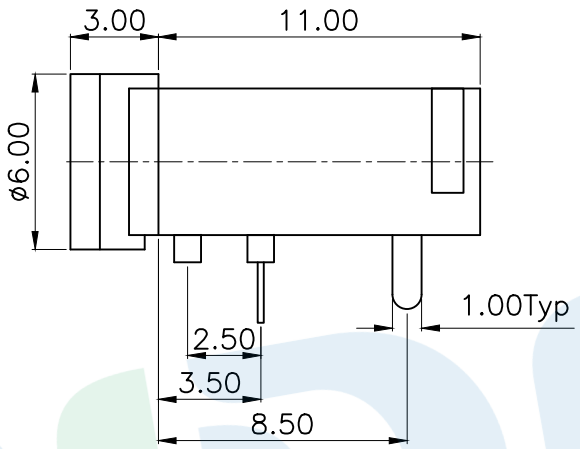

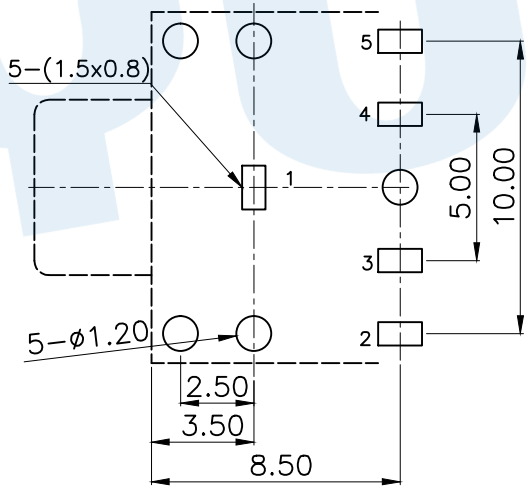

P/N	PJ−3126−A	PJ−3126−B	PJ−3126−C	PJ−3126−D
	PJ−3126A−A	PJ−3126A−B	PJ−3126A−C	PJ−3126A−D
	PJ−3126B−A	PJ−3126B−B	PJ−3126B−C	PJ−3126B−D
Schematic	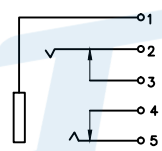	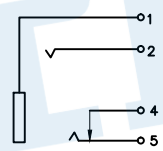	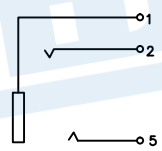	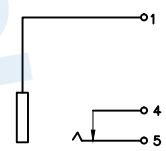

P.C.B Layout (copper−sided view)

Rating:0.5A 30V DC
Contact Resistance:100 mΩ Max.
Operating temperature:−20 ~70
Operating force:3−20N
Operating Life:5,000cycles

NO.	Name	Number	Qty	Materil	Remarks
Ⓑ	Terminal		5	Phosphor bronze	Ag Plating
Ⓐ	Housing		1	Nylon	Black

YUANDI® Yuandi Electronics Co,Ltd

			angle	±2°	
			10~30	±0.30	
			5~10	±0.20	
			~ 5	±0.10	
modify	Review	Approved	Tolerance not specified		

design		date		name PHONE JACKES
Review		date		
Approved		date		name PJ−3126
Drawing number:				
Proportion	1:1	unit	mm	gape number A4