RoHS

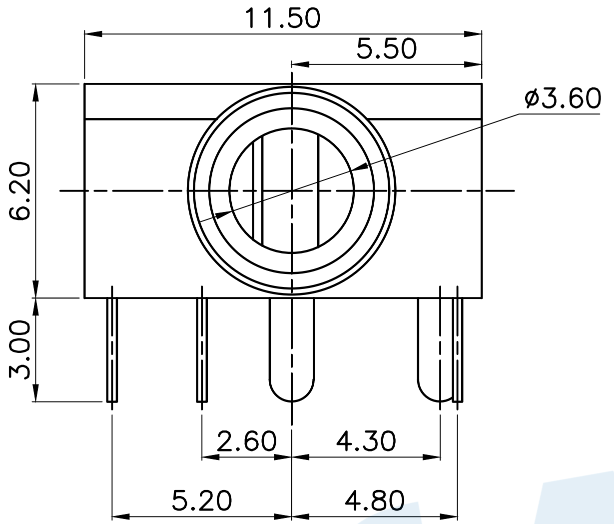

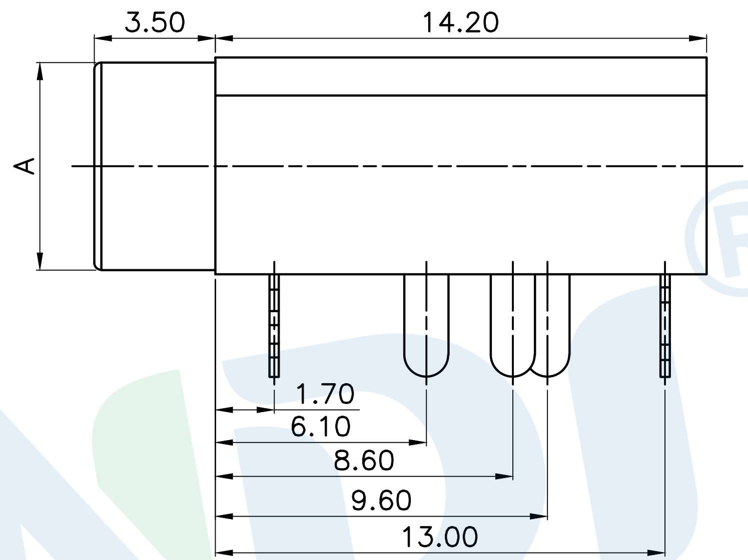

Model No.	A=ø6	PJ-3240-A	PJ-3240-B	PJ-3240-C
	A=M6xP0.5	PJ-3240M-A	PJ-3240M-B	PJ-3240M-C
Schematic		1 3 5 4 2	1 3 4 2	1 4 2

Model No.	A=ø6	PJ-3240-D	PJ-3240-E
	A=M6xP0.5	PJ-3240M-D	PJ-3240M-E
Schematic		1 3 2	1 2

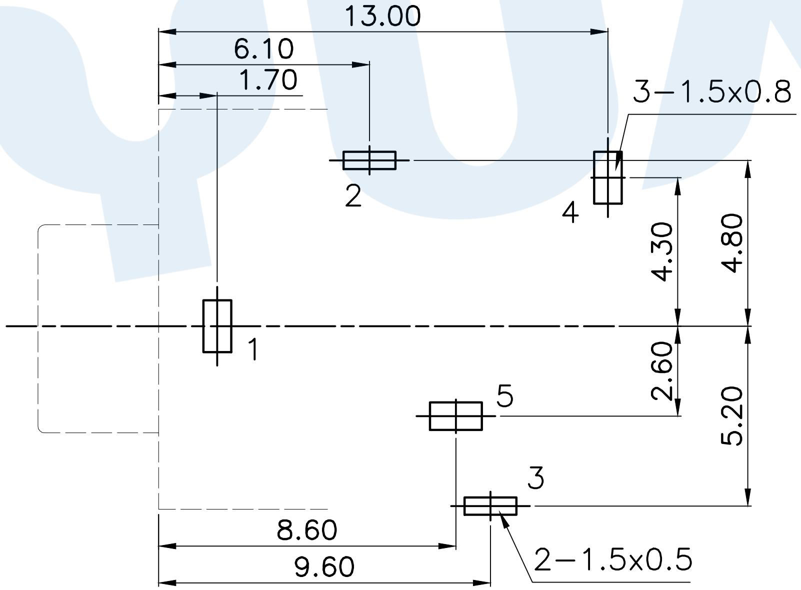

P.C.B LAYOUT(copper-sided view)

Rating:0.5A 30V DC
Contact Resistance:100 mΩ Max.
Operating temperature:-20 ~70
Operating force:3-20N
Operating Life:5,000cycles

NO.	Name	Number	Qty	Materil	Remarks
B	Terminal		5	Phosphor bronze	Ag Plating
A	Housing		1	Nylon	Black

YUANDI® Yuandi Electronics Co,Ltd

design	date	
Review	date	
Approved	date	
name	PHONE JACKES	
model	PJ-3240	

Tolerance not specified	
angle	±2°
10~30	±0.30
5~10	±0.20
~ 5	±0.10

modify | Review | Approved

Drawing number:

Proportion 1:1 | unit mm | gape number | A4