RoHS

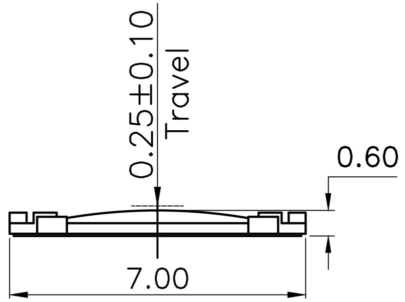

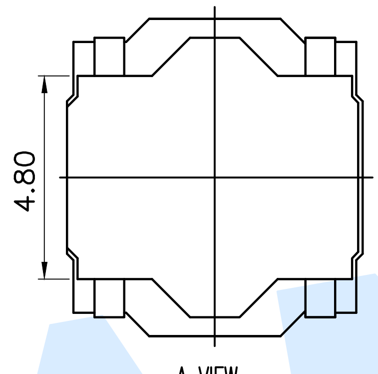

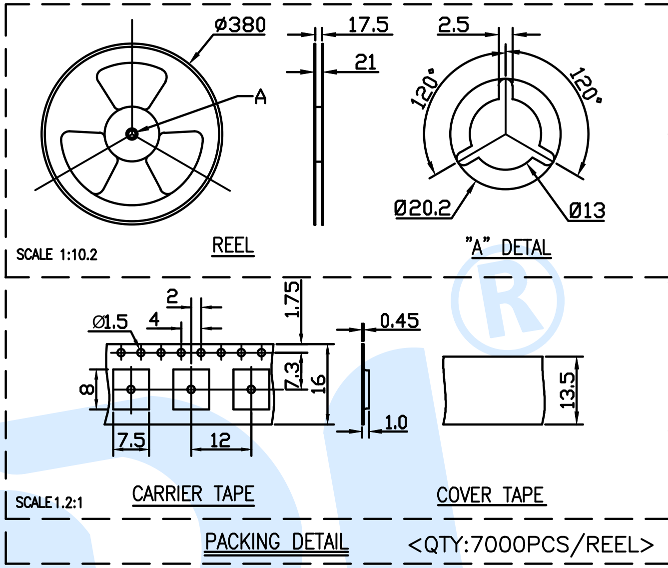

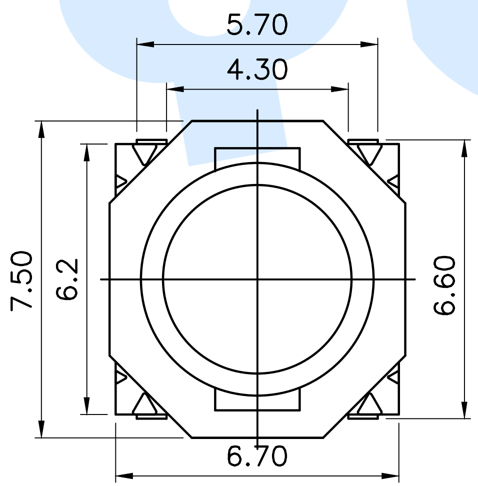

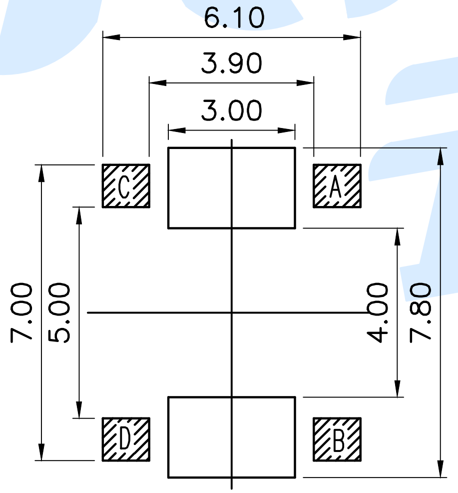

PCB Layout(Pattern side)

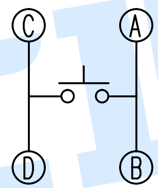

Circuit Diagram

OPERATING FORCE	
CODE	VIGOR
B1	100±30gf
B2	160±30gf
B3	200±30gf

NO.	Name	Number	Qty	Materil	Remarks
Ⓓ	Terminal		4	Brass	Silvering
Ⓒ	Reed		1	SUS	Silver Covered
Ⓑ	Dust film		1	Polyimide tape	
Ⓐ	Base		1	LCP	White

YUANDI® Yuandi Electronics Co,Ltd

angle	±2°	design	date
10~30	±0.30	Review	date
5~10	±0.20	Approved	date
~ 5	±0.10	Drawing number:	

modify	Review	Approved	Tolerance not specified	Proportion	1:1	unit	mm	gape number	A4

name	TACT SWITCHS
model	TS-1041-B□