RoHS

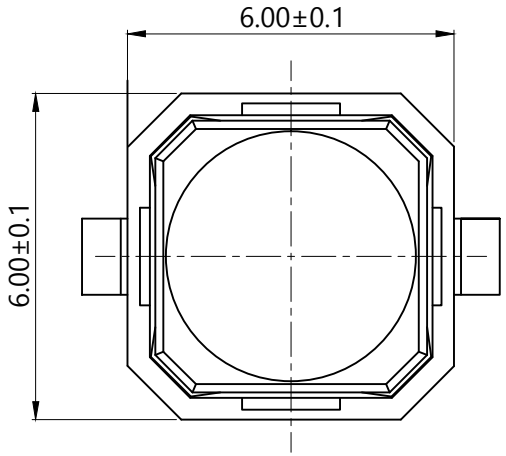

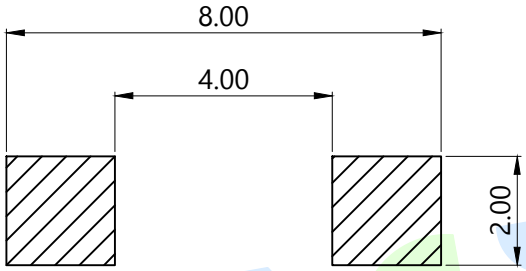

PCB Layout(Pattern Side)

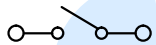

Circuit diagram

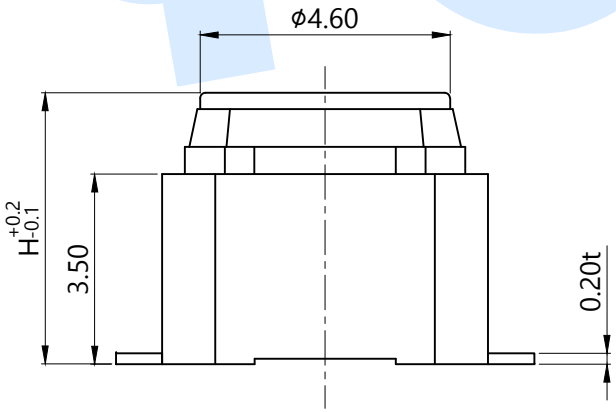

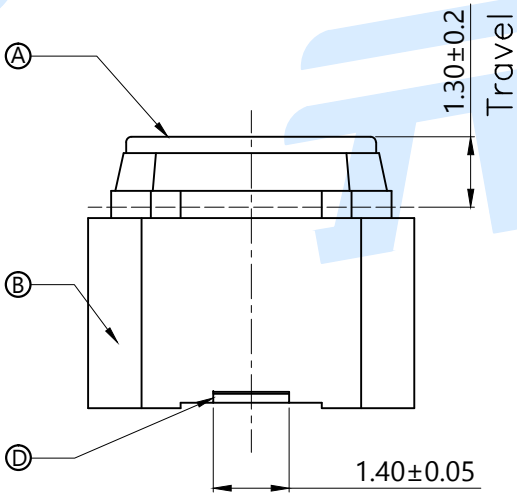

TOTAL HEIGHT	
CODE	H
A1	4.3
A2	5.0

SHRAPNEL	
CODE	MATERIAL/QTY
D1	C5210/1PCS
D2	SUS/1PCS

OPERATING FORCE	
CODE	VIGOR
B2	180±50gf
B3	250±50gf

NO.	Name	Number	Qty	Materil	Remarks
Ⓔ	Waterproof	silicone	1	Silica gal	Black
Ⓓ	Terminal		2	Phosphor bronze	Silvering
Ⓒ	Reed		1	SUS	Silver covered
Ⓑ	Base		1	LCP	Black
Ⓐ	Button		1	PA6T	Black

YUANDI® Yuandi Electronics Co,Ltd

angle	±2°	design	date	name	TACT SWITCHS
10~30	±0.30	Review	date		
5~10	±0.20	Approved	date	model	TS-1068A-A□B□-D□
~ 5	±0.10	Drawing number:			
modify / Review / Approved	Tolerance not specified	Proportion 1:1	unit mm	gape number	A4