RoHS

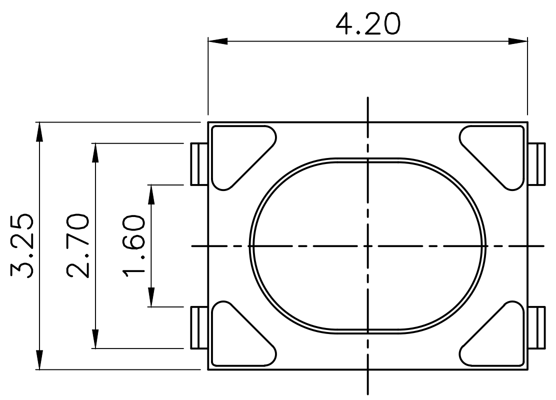

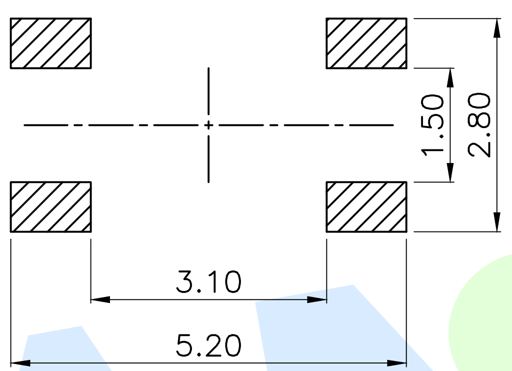

PCB Layout(Pattern side)

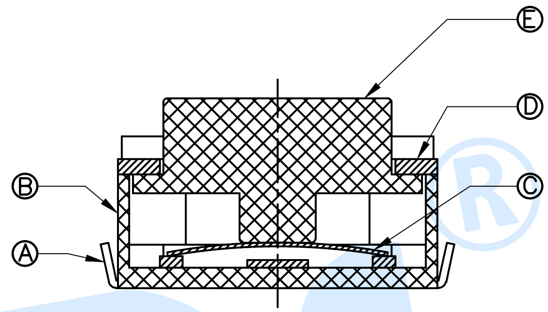

SHRAPNEL	
CODE	MATERIAL/QTY
D2	SUS/1PCS
D4	SUS/2PCS

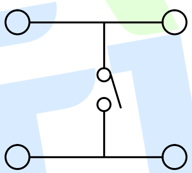

Circuit Diagram

OPERATING FORCE	
CODE	VIGOR
B2	180±30gf
B3	250±30gf
B4	400±30gf

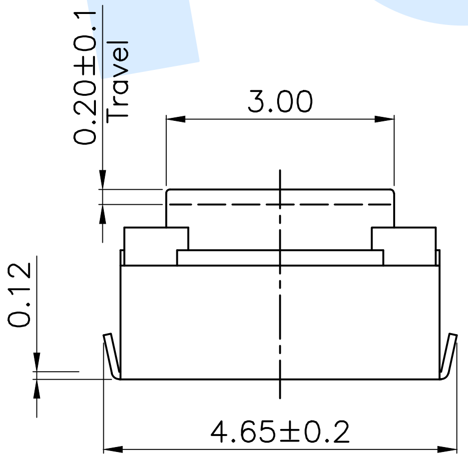

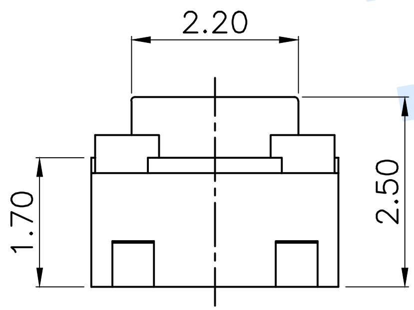

NO.	Name	Number	Qty	Materil	Remarks
Ⓔ	Button		1	LCP	White
Ⓓ	Cover		1	SUS	Silvering
Ⓒ	Reed		1	SUS	Silver Covered
Ⓑ	Base		1	LCP	White
Ⓐ	Terminal		4	Phosphorus bronze	Silvering

YUANDI® 元迪 Yuandi Electronics Co,Ltd

Tolerance not specified	angle	±2°	design	date
	10~30	±0.30	Review	date
	5~10	±0.20	Approved	date
	~ 5	±0.10	Drawing number:	
modify	Review	Approved		

name	TACT SWITCHS				
model	TS-1070A-B□D□				
Proportion	1:1	unit	mm	gape number	A4