RoHS

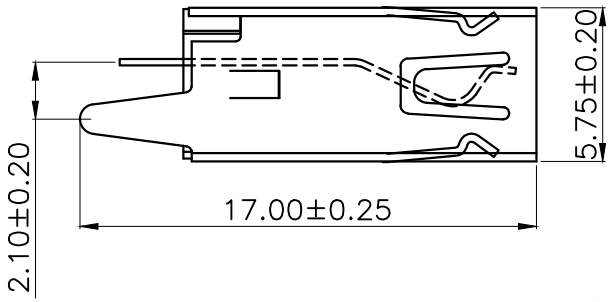

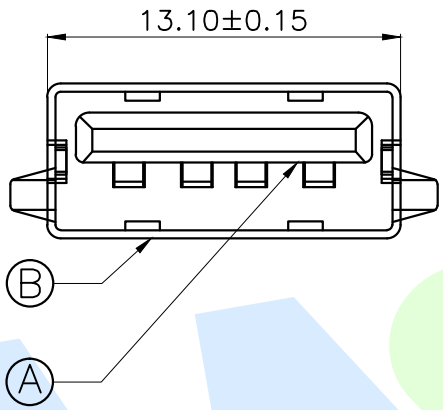

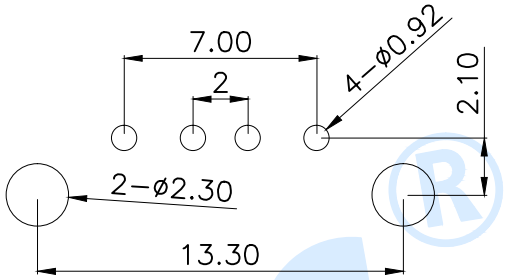

P.C.B Layout(Pattern side)

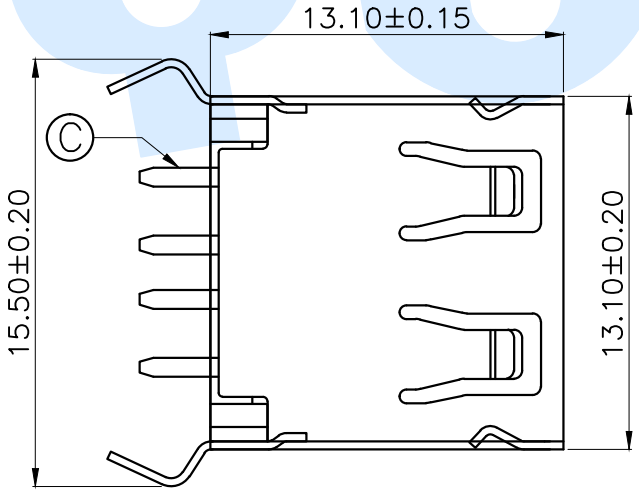

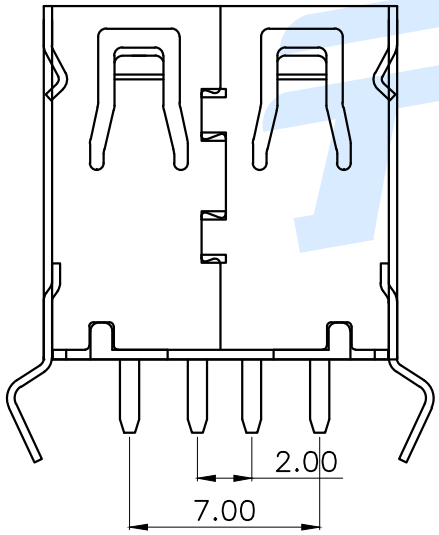

规格说明:Specifications
电气特性:Electrical
1.额定电流:Current Rating
1.5A/contact terminal
2.额定电压:Voltage Rating
30V DC
3.接触阻抗:Contact Resistance
50 milliohms Max
4.耐电压:Dielectnic Withstanding Voitage
AC 500V/1MINUTE.
5.绝缘阻抗:Lnsulation Resistance
1000MEGA Ohms Min
物理性能:Mechanical
1.插拔力:Cnnector Mate and Unmate Force
Insertion force:35N(3.57kgf)MAX
Extraction force:10-35N(1.02-3.57kgf)Min
端子保持力:Terminal Retenion
1.0kgf(MIN)
耐久性:Durability
3000cycles.EXTRACTLON FORCE:
10-35N(1.02-3.57kgf)

NO.	Name	Number	Qty	Materil	Remarks
C	Terminal		4	Brass	Ag Plating
B	Shell		1	SPCC	Ni Plating
A	Base		1	PBT+30%GF	White/Black

Yuandi Electronics Co,Ltd

angle	±2°		
10~30	±0.30		
5~10	±0.20		
~ 5	±0.10		
modify	Review	Approved	Tolerance not specified

design		date	
Review		date	
Approved		date	
Drawing number:			
Proportion	1:1	unit	mm
gape number			

name	USB CONNECTOR
model	USB180-06-T1-W
A4	