RoHS

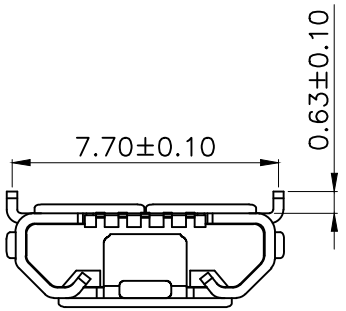

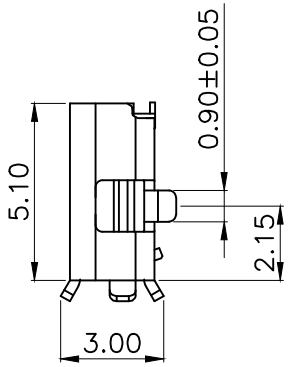

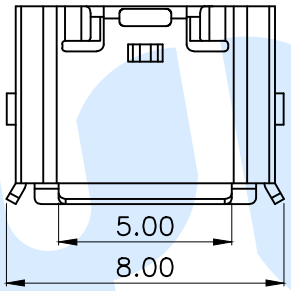

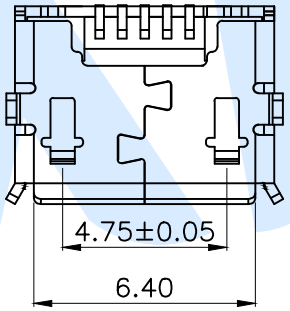

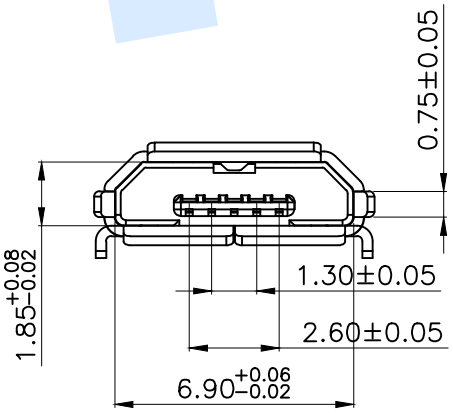

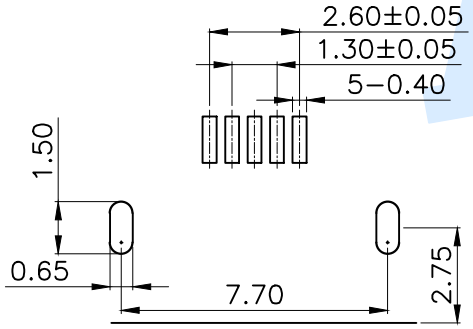

Recommended P.C.B Layout

规格说明:Specifications
电气特性:Electrical
1.额定电流:Current Rating
1.0A/contact terminal
2.额定电压:Voltage Rating
30V DC
3.接触阻抗:Contact Resistance
50 milliohms Max
4.耐电压:Dielectnic Withstanding Voitage
AC 100V/1MINUTE.
5.绝缘阻抗:Lnsulation Resistance
100MEGA Ohms Min
物理性能:Mechanical
1.插拔力:Cnnector Mate and Unmate Force
Insertion force:3.57kgf(MAX)
Extraction force:1.02kgf(Min).0.81~2.05kgf(Min).
端子保持力:Terminal Retenion
0.5kgf(MIN)

NO.	Name	Number	Qty	Materil	Remarks
Ⓒ	Terminal		5	Copper alloy	Au Plating
Ⓑ	Shee		1	Copper alloy	Ag Plating
Ⓐ	Base		1	LCP	Black

YUANDI® Yuandi Electronics Co,Ltd

angle	±2°	design	date	name	USB CONNECTOR
10~30	±0.30	Review	date		
5~10	±0.20	Approved	date	model	MICRO−28−P1−A2T2
~ 5	±0.10	Drawing number:			
modify / Review / Approved	Tolerance not specified	Proportion 1:1	unit mm	gape number	A4